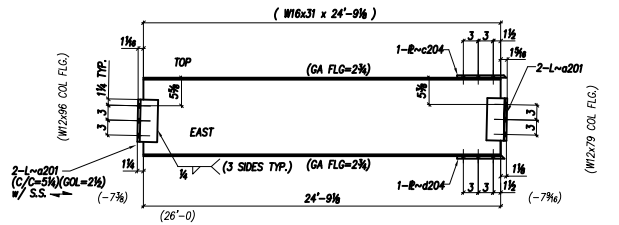

1 - BEAM ~ A204

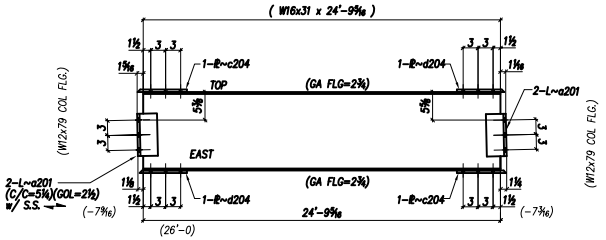

1 - BEAM ~ B204

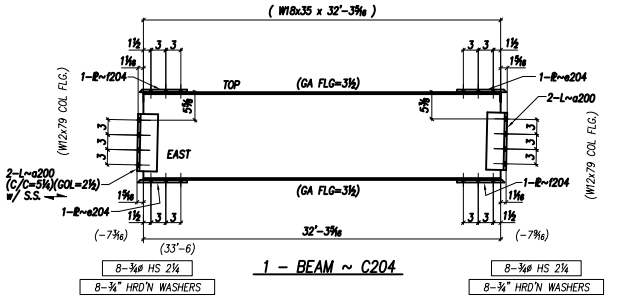

1 - BEAM ~ C204

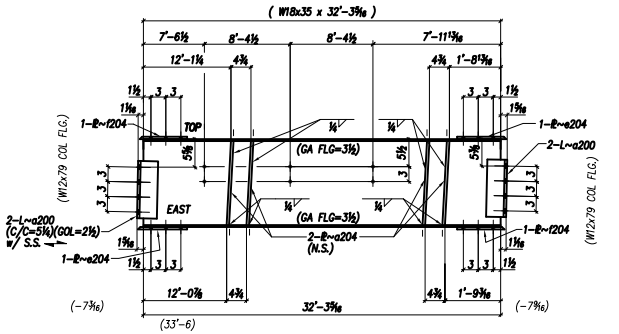

1 - BEAM ~ D204

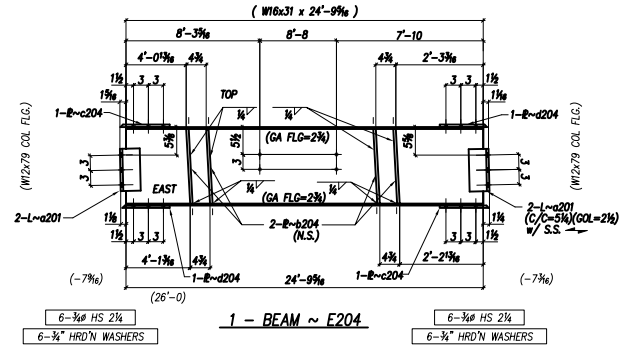

1 - BEAM ~ E204

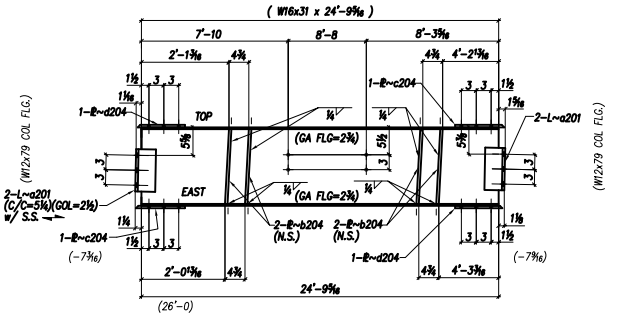

1 - BEAM ~ F204

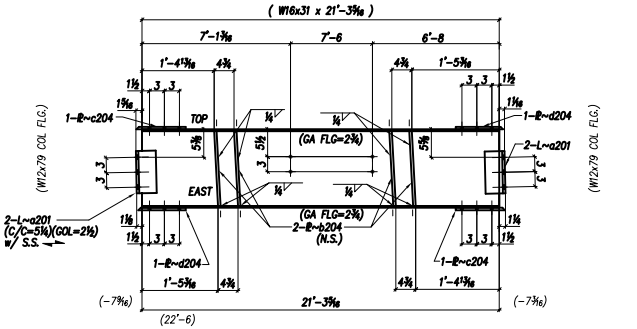

1 - BEAM ~ G204

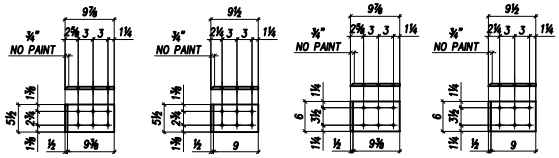

No. Pcs.	Materials	Length	Temp. Mark	Steel Gr.	No. Pcs.	Description	Shipping Mark	Weight
1	W16x31	24'-9⅛		A572	1	BEAM	A204	
4	L 4x4x5/16	0'-8½	a201	A572				
1	PL ½ x 5½	0'-9⅞	c204	A572				
1	PL ½ x 5½	0'-9½	d204	A572				
12	¾ x 2¼ BOLT & NUT			A325				
12	¾ø HRD'D WASHER			-				
1	W16x31	24'-9⅛		A572	1	BEAM	B204	
4			a201	A572				
2	PL ½ x 5½	0'-9⅞	c204	A572				
2	PL ½ x 5½	0'-9½	d204	A572				
24	¾ x 2¼ BOLT & NUT			A325				
24	¾ø HRD'D WASHER			-				
1	W18x35	32'-3⅜		A572	1	BEAM	C204	
4	L 4x4x5/16	0'-11½	a200	A572				
2	PL ½ x 6	0'-9⅞	e204	A572				
2	PL ½ x 6	0'-9½	f204	A572				
24	¾ x 2¼ BOLT & NUT			A325				
24	¾ø HRD'D WASHER			-				
1	W18x35	32'-3⅜		A572	1	BEAM	D204	
4			a200	A572				
4	PL ½ x 5	1'-4¾	a204	A572				
2	PL ½ x 6	0'-9⅞	e204	A572				
2	PL ½ x 6	0'-9½	f204	A572				
24	¾ x 2¼ BOLT & NUT			A325				
24	¾ø HRD'D WASHER			-				
1	W16x31	24'-9⅛		A572	1	BEAM	E204	
4			a201	A572				
4	PL ½ x 5	1'-2⅞	b204	A572				
2	PL ½ x 5½	0'-9⅞	c204	A572				
2	PL ½ x 5½	0'-9½	d204	A572				
24	¾ x 2¼ BOLT & NUT			A325				
24	¾ø HRD'D WASHER			-				
1	W16x31	24'-9⅛		A572	1	BEAM	F204	
4			a201	A572				
4			b204	A572				
2	PL ½ x 5½	0'-9⅞	c204	A572				
2	PL ½ x 5½	0'-9½	d204	A572				
24	¾ x 2¼ BOLT & NUT			A325				
24	¾ø HRD'D WASHER			-				
1	W16x31	21'-3⅝		A572	1	BEAM	G204	
4			a201	A572				
4			b204	A572				
2	PL ½ x 5½	0'-9⅞	c204	A572				
2	PL ½ x 5½	0'-9½	d204	A572				
24	¾ x 2¼ BOLT & NUT			A325				
24	¾ø HRD'D WASHER			-				

SURFACE PREP:
SHOP PAINT:
TOTAL WEIGHT ON DWG.
PAINT AROUND HOLES
NO PAINT WITHIN 3" OF HOLES
WELD ELECTRODES:
HOLES:
BOLTS:

CUSTOMER:
JOB:
LOCATION:
DETAILS OF:

MADE	DATE	CONTRACT	SEQ.	DRAWING	REV.
CHECKED	DATE				

NO.	DATE	BY	CK	DATE	DESCRIPTION:

REVISION